aruba
a Hewlett Packard Enterprise company

ARUBA AP ACCESSORIES

Mounts, Antennas, Power, and Miscellaneous Accessories

All installation guides can be found @ https://asp.arubanetworks.com

Table of Contents

Access Points Mounts 5
Indoor Access Point Mounts 5
AP-220-MNT-C1 (JW044A) 5
AP-220-MNT-C2 (JW045A) 5
AP-220-MNT-CM1 (JX961A) 5
AP-220-MNT-W1 / AP-220-MNT-W1W (JW046A / JW047A) 6
AP-200-MNT-W3 (JY705A) 6
AP-220-MNT-W3 (JY706A) 6
AP-310-MNT-W3 (R0G64A) 7
AP-MNT-W4 (Q9U25A) 7
AP-MNT-A / AP-MNT-MP10-A (R3J15A / JZ370A) 7
AP-MNT-B / AP-MNT-MP10-B (R3J16A / Q9G69A) 8
AP-MNT-MP10-B1 (R6T34A) 8
AP-MNT-C / AP-MNT-MP10-C (R3J17A / Q9G70A) 8
AP-MNT-D / AP-MNT-MP10-D (R3J18A / Q9G71A) 9
AP-MNT-E / AP-MNT-MP10-E (R3J19A / R1C72A) 9
AP-MNT-MP10-X (R3T20A) 9
Remote and Hospitality Access Points Mounts 10
AP-203H-MNT1 (JY701A) 10
AP-203H-MNTW (JY703A) 10
AP-203H-MNTD (JY704A) 10
AP-303H-MNT1 (JY686A) 11
AP-303H-MNT2 (JY687A) 11
AP-303H-MNTD (JY689A) 11
AP-303H-MNTW (JY688A) 12
AP-303H-MNTU (R3T21A) 12
AP-500H-MNT1 (R3V58A) 12
AP-505H-MNT2 (R3V59A) 13
AP-503H-MNT2 (R3V61A) 13
AP-500H-MNTD (R3V60A) 13
Outdoor Access Point Mounts 14
AP-270-MNT-V1 (JW052A) 14
AP-270-MNT-V2 (JW053A) 14
AP-270-MNT-H1 (JW054A) 14
AP-270-MNT-H2 (JW055A) 15
AP-270-MNT-H3 (R6W11A) 15
AP-270-MNT-ADP (JW056A) 15
Access Point External Antennas 16
Indoor Antennas 16
AP-ANT-1W (JW009A) 16
AP-ANT-13B (JW001A) 16
AP-ANT-16 (JW003A) 16
AP-ANT-19 (JW004A) 16
AP-ANT-20W (JW011A) 16
AP-ANT-22 (Q8N49A) 16
AP-ANT-25A (JW012A) 17
AP-ANT-28 (JW013A) 17
AP-ANT-40 (JW017A) 17
AP-ANT-45 (JW018A) 17
AP-ANT-48 (JW019A) 17
AP-ANT-MNT-3 (JW020A) 17

AP-ANT-MNT-4 (JW021A) 17
AP-ANT-MNT-5 (JW022A) 17
Outdoor Antennas 18
ANT-2x2-2005 (JW023A) 18
ANT-4x4-5005 (JW026A) 18
ANT-4x4-5010 (JW027A) 18
ANT-4x4-D100 (Q8N50A) 18
ANT-4x4-D608 (Q8N51A) 18
ANT-2x2-2314 (JW024A) 18
ANT-4x4-5314 (JX988A) 19
ANT-2x2-2714 (JW025A) 19
ANT-3x3-5712 (JW033A) 19
ANT-CBL-1 (JW068A) 19
ANT-CBL-2 (JW069A) 19
AFC7DL03-00 (JW064A) 19
AFC7DL04-00 (JW065A) 19
AP-CBL-1 (JW070A) 20
AFC2DL6-00 (JW066A) 20
AFCSJMTM-00 (JW067A) 20
AP-LAR-1 (JW061A) 20
Access Point Power Solutions 20
Indoor Power Accessories 20
AP-POE-AFGE (R6P68A) 20
AP-POE-ATSR (R6P67A) 20
AP-POE-BTSR (R1C73A) 21
AP-AC2-12B (R3K00A) 21
AP-AC2-48C (R3K01A) 21
Power Cords 21
Outdoor Power Accessories 22
PD-9001GO-NA / PD-9001GO-INTL (JW700A / JW701A) 22
PD-9001GO-DC (JW630A) 22
PD-Mount-OD (JW620A) 22
PC-OD-AC-P-NA / PC-OD-AC-P-INT (JW081A / JW080A) 22
CKIT-OD-AC-P (JW079A) 22
Miscellaneous Access Point Power Accessories 23
Indoor Access Point Accessories 23
AP-303H-CVR-20 (JY973A) 23
AP-303-CVR-20 (JZ327A) 23
AP-305-CVR-20 (JX951A) 23
AP-315-CVR-20 (JW827A) 23
AP-325-CVR-20 (JW076A) 23
AP-335-CVR-20 (JW828A) 23
AP-505-CVR-20 (R2H24A) 23
AP-515-CVR-20 (Q9H74A) 24
AP-535-CVR-20 (JZ368A) 24
AP-555-CVR-20 (JZ369A) 24
AP-CBL-SER (JW071A) 24
AP-CBL-SERU (JY728A) 24
AP-MOD-SERU (R6Q99A) 24
AP-USB-ZB / AP-USB-ZB 10pk / AP-USB-ZB 50pk (R2X45A / R2Y09A / R2Y10A) 24
LS-BT1USB-5 / LS-BT1USB-50 (JW315A / JW316A) 25
Outdoor Access Point Accessories 25
SFP-LX (Q8N52A) 25
SFP-SX (Q8N53A) 25
Outdoor SFP Weathertight Strain Relief Kit (Q8N54A) 25
Outdoor HazLoc Fiber Strain Relief Kit (R7L09A) 25
Outdoor Glands and Covers (Q8N47A) 25
Outdoor M20-to-1/2” NPT Thread Adapter (non-EX Only) (Q8N48A) 26

AINS2KKIT-00 (JW063A)..... 26

ACCESS POINTS MOUNTS

INDOOR ACCESS POINT MOUNTS

AP-220-MNT-C1 (JW044A)

The AP-220-MNT-C1 is designed for the AP-1xx, 2xx, and 3xx indoor APs to attach to a 9/16” or 15/16” flat T-rail on the ceiling. Kit includes two clips (for 9/16” and 15/16” flat T-rails).





AP-220-MNT-C2 (JW045A)

The AP-220-MNT-C2 is designed for the AP-1xx, 2xx, and 3xx indoor APs to attach to a Silhouette or Interlude rail on the ceiling. Kit includes two clips (one for Silhouette and one for Interlude style rails).





AP-220-MNT-CM1 (JX961A)

The AP-220-MNT-CM1 is designed for the AP-1xx, 2xx, and 3xx indoor APs to attach to 9/16”, 15/16”, Interlude, and Silhouette ceiling rails. Note that the CM1 has some assembly based on the type of ceiling and is made of metal.





AP-220-MNT-W1 / AP-220-MNT-W1W (JW046A / JW047A)

The AP-220-MNT-W1/W1W is designed for the AP-1xx, 2xx, and 3xx indoor APs to attach to a flat surface. The W1 is black in color, the W1W is white in color.





AP-200-MNT-W3 (JY705A)

The AP-200-MNT-W3 is designed for the smaller indoor AP models like the AP-303/303P and the AP-304/305 indoor APs to attach the AP to a flat surface or wiring box. If used on the AP-304/305, note the mount will block the use of the DC power port and the console interface. The AP-200-MNT-W3 includes a jumper and receptacle to use the side of the mount for the cable connection, or the Ethernet can be passed from the back of the mount to the AP.

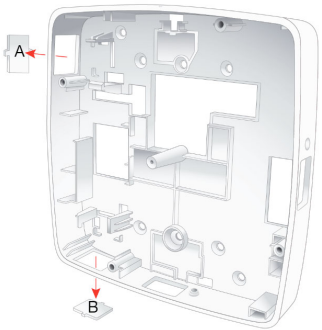



AP-220-MNT-W3 (JY706A)

The AP-220-MNT-W3 is designed for the AP-3xx APs to attach the AP to a flat surface. The AP-220-MNT-W3 includes a jumper and receptacle to use the side of the mount for the cable connection, or the Ethernet can be passed from the back of the mount to the AP. Note this mount is larger, and while it will work with the AP-303, and 304/305, it is larger than the footprint of the AP.





AP-310-MNT-W3 (R0G64A)

The AP-310-MNT-W3 is a wall or surface mount designed specifically for the AP-315. The AP-220-MNT-W3 includes a jumper and receptacle to use the side of the mount for the cable connection, or the Ethernet can be passed from the back of the mount to the AP.

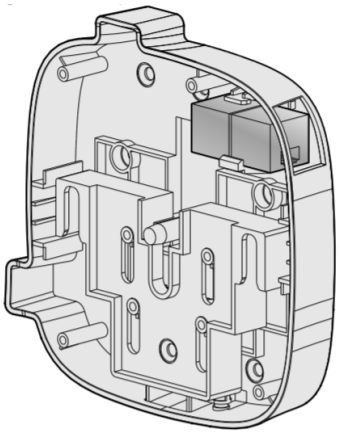



AP-MNT-W4 (Q9U25A)

AP-MNT-W4 is a simple mount for surface mounting the AP-1xx, 2xx, and 3xx APs to a flat surface.

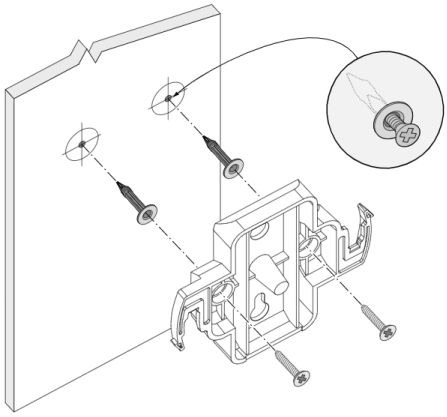



AP-MNT-A / AP-MNT-MP10-A (R3J15A / JZ370A)

Designed for the AP-5xx and future APs, the AP-MNT-A attaches an AP-5xx AP to a 9/16” ceiling T-rail. Note the AP-MNT-MP10-A is sold as a 10-pack.

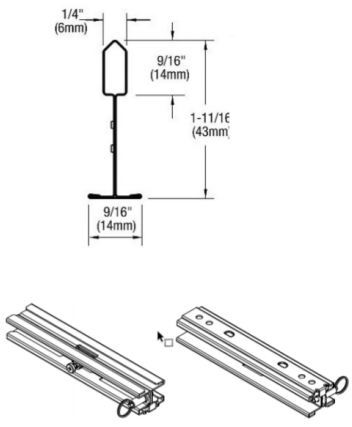



AP-MNT-B / AP-MNT-MP10-B (R3J16A / Q9G69A)

Designed for the AP-5xx and future APs, the AP-MNT-B attaches an AP-5xx AP to a 15/16” ceiling T-rail. Note the AP-MNT-MP10-B is sold as a 10-pack.

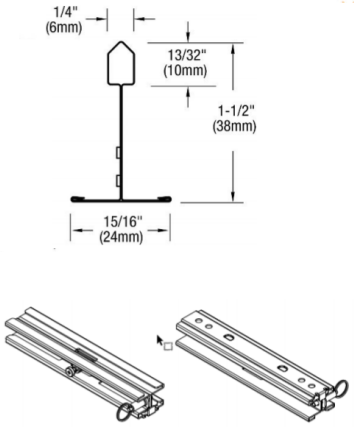



AP-MNT-MP10-B1 (R6T34A)

Designed for the AP-5xx and future APs, the AP-MNT-MP10-B1 attaches an AP-5xx AP to a 15/16” ceiling T-rail, where the T-rail is thicker than a normal 15/16” T-rail. Once attached to the T-rail, two screws are tightened on the mount to secure the mount to the T-rail. Note the AP-MNT-MP10-B1 is sold as a 10-pack only.

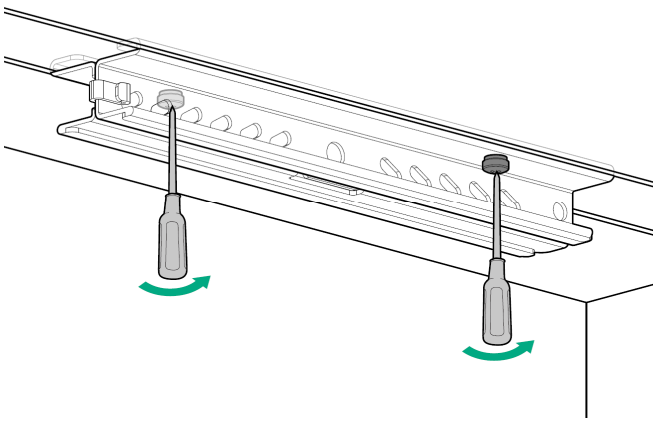



AP-MNT-C / AP-MNT-MP10-C (R3J17A / Q9G70A)

Designed for the AP-5xx and future APs, the AP-MNT-C attaches an AP-5xx AP to a 9/16” ceiling profile-style rail (like the Armstrong ‘Interlude’ and ‘Silhouette’ style rails). Note the AP-MNT-MP10-C is sold as a 10-pack.

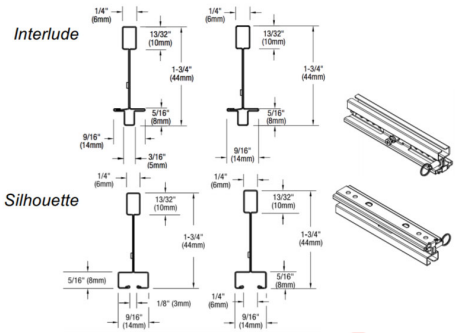



AP-MNT-D / AP-MNT-MP10-D (R3J18A / Q9G71A)

Designed for the AP-5xx and future APs, the AP-MNT-D attaches an AP-5xx AP to mount the AP to a flat surface. The AP-MNT-D has a narrow, flat base that can be attached to any flat surface, but works best when attached to a narrow flat surface. Note the AP-MNT-MP10-D is sold as a 10-pack.

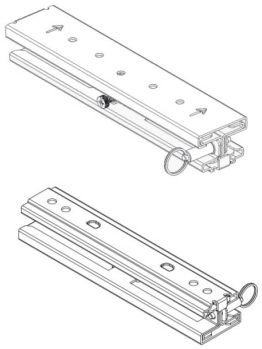



AP-MNT-E / AP-MNT-MP10-E (R3J19A / R1C72A)

Designed for the AP-5xx and future APs, the AP-MNT-E attaches an AP-5xx AP to a flat surface. The AP-MNT-E has a wide, flat base and has pre-drilled holes to marry up to the older W1 or W3 mount points, for 1 and 2-gang electrical boxes, and has pre-drilled holes for matching up with other surface mounting solutions. Note the AP-MNT-MP10-E is sold as a 10-pack.

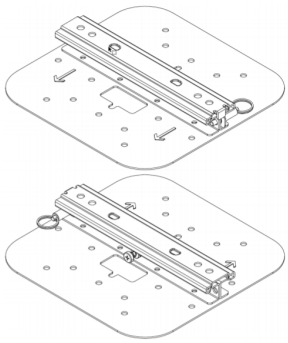



AP-MNT-MP10-X (R3T20A)

The AP-MNT-MP10-X mounting bracket allows a 5xx AP to mount to an older W2 or W3 mounting solution, as an adapter. The AP-MNT-MP10-X is only sold as a 10-pack.

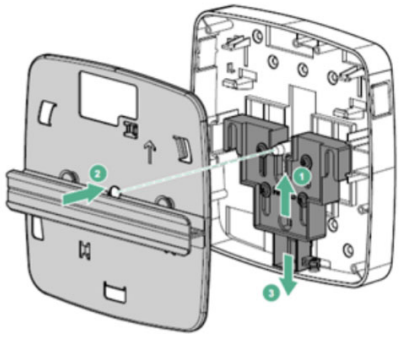

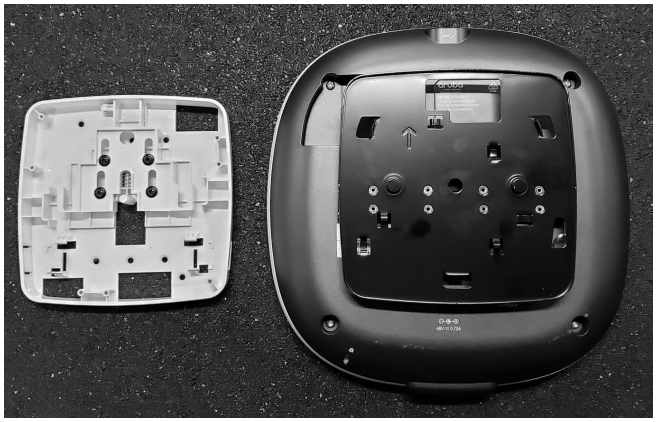

REMOTE AND HOSPITALITY ACCESS POINTS MOUNTS

AP-203H-MNT1 (JY701A)

The AP-203H-MNT1 is used to surface mount an AP-203H to a wall, flat surface, or to a 1-gang electrical box. There are multiple mounting points and holes that marry up to a 1-gang electrical box.





AP-203H-MNTW (JY703A)

The AP-203H-MNTW is to mount an AP-203H to a wall or flat surface, or to cover a 2-gang electrical box. There are multiple mounting points and holes that marry up to a 1-gang or 2-gang electrical box, and the base covers the required area.

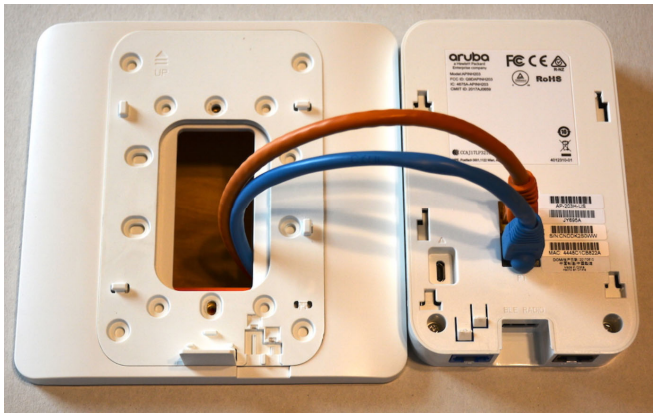



AP-203H-MNTD (JY704A)

The AP-203H-MNTD is a desk stand to support the AP-203H deployments on desks or tables. The mount includes a jumper to bridge E0 from the back of the AP to the bridged port on the bottom of the AP.

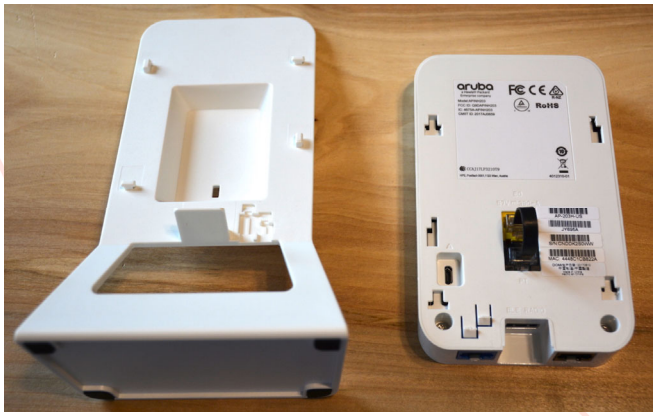



AP-303H-MNT1 (JY686A)

The AP-303H-MNT1 is used to surface mount an AP-303H to a wall, flat surface, or to a 1-gang electrical box. There are multiple mounting points and holes that marry up to a 1-gang electrical box.





AP-303H-MNT2 (JY687A)

The AP-303H-MNT2 is to mount an AP-303H to a wall or flat surface, or to cover a 2-gang electrical box. There are multiple mounting points and holes that marry up to a 1-gang or 2-gang electrical box, where the base covers the required area. The mount also includes a snap on cover that attaches to the mount on the left side of the AP for a more uniform look.

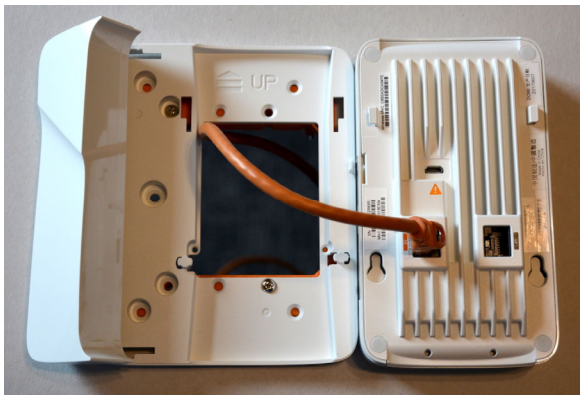



AP-303H-MNTD (JY689A)

The AP-303H-MNTD is a desk stand to support the AP-303H deployment on desks or tables. The mount includes a jumper to bridge E0 from the back of the AP to the bridged port on the bottom of the AP.





AP-303H-MNTW (JY688A)

The AP-303H-MNTW is to attach the AP-303H to a wall, flat surface, or a 1-gang electrical box, where the mount also includes two empty Kensington keystone slots to allow for additional Ethernet connectors to be available under the AP. Most common use case is where two or three Ethernet cables exist in a wall jack, one would be used for the AP, and the other two Ethernet ports are available via the keystone jacks under the AP.

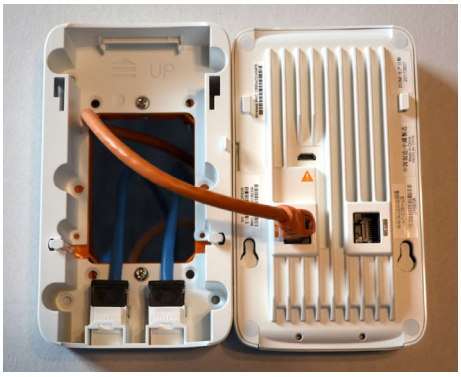



AP-303H-MNTU (R3T21A)

The AP-303H-MNTU is similar to the AP-303H-MNT2 but has a decorative cover that attaches to the right side of the AP, and has room to cover the use of a USB accessory (like the AP-USB-ZB ZigBee/802.15.4 USB radio) or some other USB accessory connected to the AP-303H USB port.

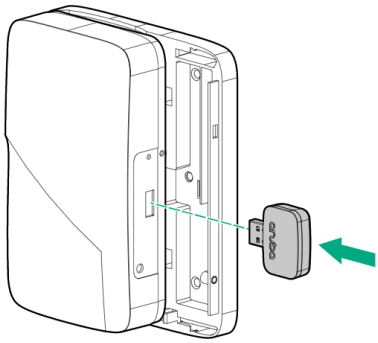

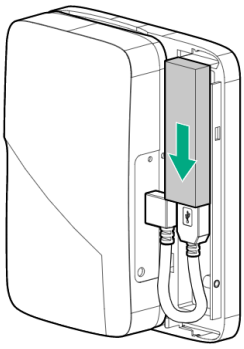

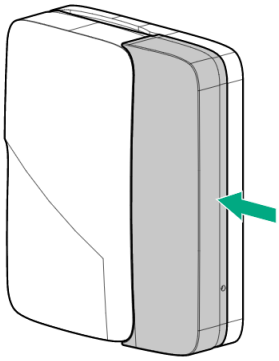

AP-500H-MNT1 (R3V58A)

The AP-500H-MNT1 is used to surface mount an AP-505H or AP-503H to a wall, flat surface, or to a 1-gang electrical box. There are multiple mounting points and holes that marry up to a 1-gang electrical box.





AP-505H-MNT2 (R3V59A)

The AP-505H-MNT2 is to mount an AP-505H to a wall or flat surface, or to cover a 2-gang electrical box. There are multiple mounting points and holes that marry up to a 1-gang or 2-gang electrical box, where the base covers the required area. The mount also includes a snap on cover that attaches to the mount on the right side of the AP for a more uniform look.

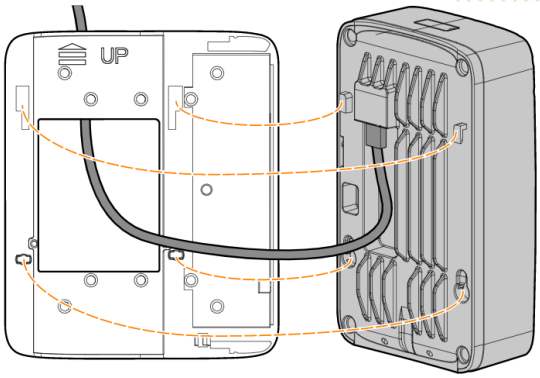

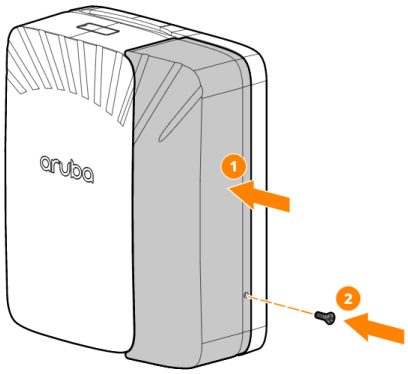

AP-503H-MNT2 (R3V61A)

The AP-503H-MNT2 is to mount an AP-503H to a wall or flat surface, or to cover a 2-gang electrical box. There are multiple mounting points and holes that marry up to a 1-gang or 2-gang electrical box, where the base covers the required area. The mount also includes a snap on cover that attaches to the mount on the right side of the AP for a more uniform look.

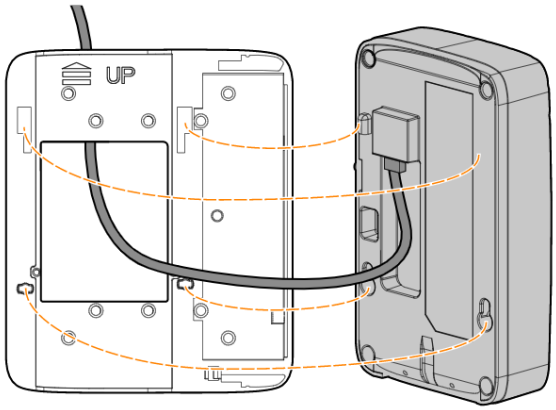

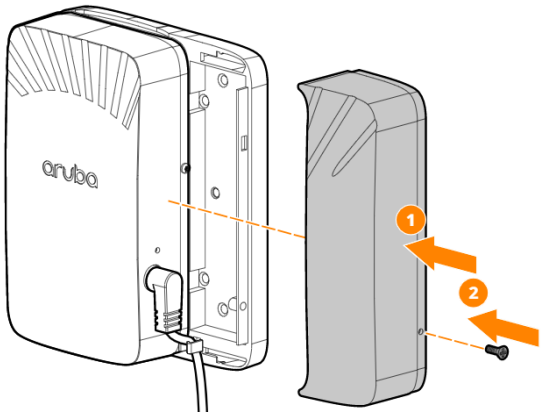

AP-500H-MNTD (R3V60A)

The AP-500H-MNTD is a desk stand to support the AP-505H and AP-503H deployment on desks or tables. The Ethernet cable routes from the back of the AP and out the bottom of the AP, no jumpers are needed or included with the mount.

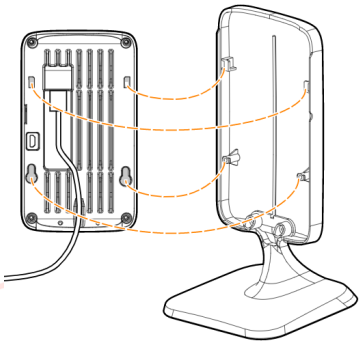

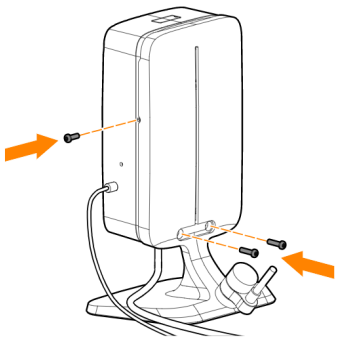

OUTDOOR ACCESS POINT MOUNTS

AP-270-MNT-V1 (JW052A)

The AP-270-MNT-V1 is a long arm mounting bracket for the AP-270, AP-360, AP-370, AP-560, and AP-570 Series outdoor APs. Primarily designed to pole mount omni-directional APs with enough separation between the pole and AP to minimize RF shadowing from the pole. The mount can also be used as a wall mount.

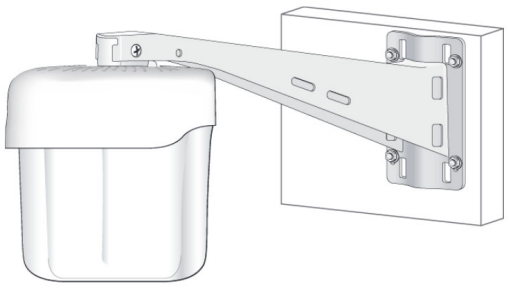



AP-270-MNT-V2 (JW053A)

The AP-270-MNT-V2 is a short arm mounting bracket for the AP-270, AP-360, AP-370, AP-560, and AP-570 Series outdoor APs. Primarily designed to wall mount omni-directional APs but can be used for pole mounting on either smaller diameter poles, or used on larger poles with the AP-360 and AP-560 Series (not recommended for the AP-370 and 570 Series pole mounting on large diameter poles due to the limited stand-off distance).





AP-270-MNT-H1 (JW054A)

The AP-270-MNT-H1 mount is primarily for the AP-270, AP-360, AP-370, AP-560, and AP-570 Series APs. The mount articulates in one direction and can be used for pole or wall-mounting directional outdoor AP variants (those ending in ‘7’) when up or down tilt articulation is needed. The AP-270-MNT-H1 can also be used to ceiling mount omni-directional outdoor APs when the ceiling is not level with the ground or where APs need to be articulated to level.

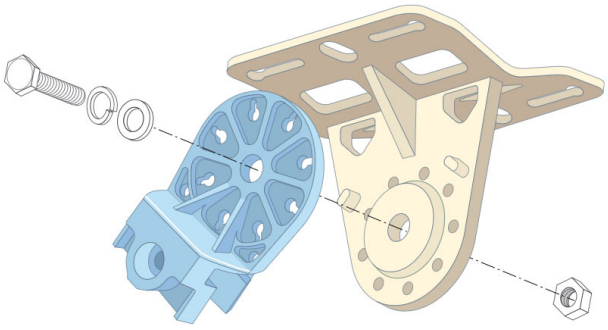

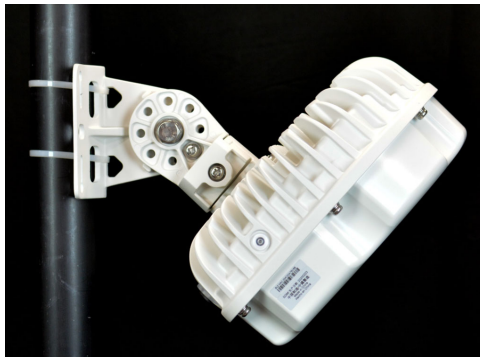

AP-270-MNT-H2 (JW055A)

The AP-270-MNT-H2 is a low-profile mounting bracket for the AP-270, AP-360, AP-370, AP-560, and AP-570 Series APs. Primarily for wall mounting the directional outdoor APs (those ending with a ‘7’) or for a low-profile ceiling mount for the omni-directional variants (those ending in ‘5’). This mount does not articulate and should not be used on poles.

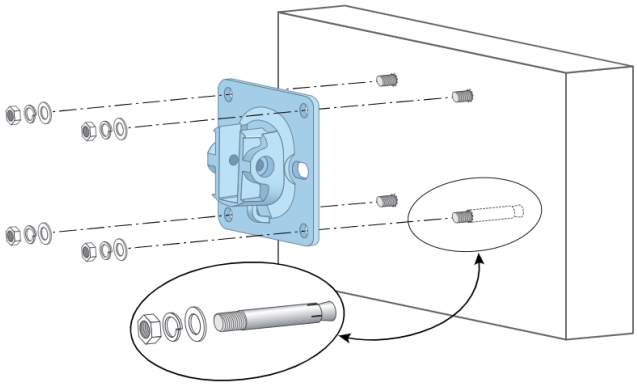



AP-270-MNT-H3 (R6W11A)

The AP-270-MNT-H3 is a dual-articulating mount for the AP-270, AP-360, AP-370, AP-560, and AP-570 Series APs. Primarily used for pole or wall mounting the directional outdoor APs (those ending in ‘7’) where articulation in both the Horizontal and Vertical planes are needed.

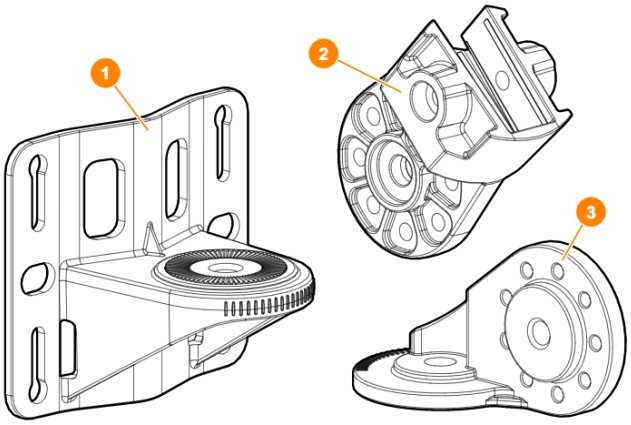

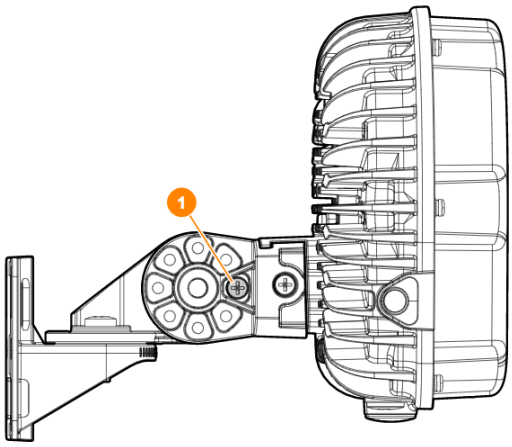

AP-270-MNT-ADP (JW056A)

The AP-270-MNT-ADP is a mount adapter for the AP-228, AP-318, or AP-518 that will allow those APs to attach to Aruba’s outdoor mounting brackets. Otherwise, the AP-228 and AP-318 will use the indoor AP-220-MNT series, and the AP-518 will use the indoor AP-5xx mounts (AP-MNT-ABCDE).

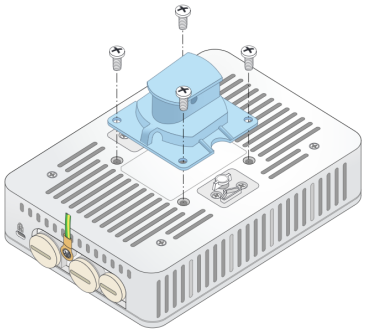



ACCESS POINT EXTERNAL ANTENNAS

INDOOR ANTENNAS

AP-ANT-1W (JW009A)

- Indoor RP-SMA omni-directional antenna
- 5.8dBi (5Ghz) / 3.8dBi (2.4Ghz)
- Requires one antenna per connector on indoor AP
- Attaches directly to the AP



AP-ANT-13B (JW001A)

- Indoor RP-SMA omni-directional antenna
- 4.0dBi (5Ghz) / 2.3dBi (2.4Ghz)
- Requires one antenna per connector on indoor AP
- Includes 30” attached RPSMA pigtail and T-rail clip



AP-ANT-16 (JW003A)

- Indoor RP-SMA 3x3 downtilt omni-directional antenna
- 4.7dBi (5Ghz) / 3.9dBi (2.4Ghz)
- Requires one antenna per 3x3 AP (can use on 2x2 AP)
- Includes 36” attached RPSMA pigtails (3) and T-rail clips



AP-ANT-19 (JW004A)

- Indoor/Outdoor RP-SMA omni-directional antenna
- 6.0dBi (5Ghz) / 3.0dBi (2.4Ghz)
- Requires one antenna per connector on indoor AP
- Includes 36” attached RPSMA pigtails (3) and mounting hardware



AP-ANT-20W (JW011A)

- Indoor RP-SMA omni-directional antenna
- 2.0dBi (5Ghz) / 2.0dBi (2.4Ghz)
- Requires one antenna per connector on indoor AP
- Attaches directly to the AP



AP-ANT-22 (Q8N49A)

- Indoor RP-SMA omni-directional antenna
- 4.0dBi (5Ghz) / 2.0dBi (2.4Ghz)
- Generally used on AP-318/518 for Large Public Venues
- Attaches directly to the AP, SKU includes (2) antennas, order two kits for 4x4 APs, or three kits for the AP-318/518



AP-ANT-25A (JW012A)

- Indoor RP-SMA 90° x 90° 2x2 directional antenna
- 5.0dBi (5Ghz) / 5.0dBi (2.4Ghz)
- Requires one antenna per 2x2 indoor AP
- Includes 30” RPSMA pigtails, does not include mounting bracket (AP-ANT-MNT-3)



AP-ANT-28 (JW013A)

- Indoor/outdoor RP-SMA 60° x 60° 2x2 directional antenna
- 7.5dBi (5Ghz) / 7.5dBi (2.4Ghz)
- Requires one antenna per 2x2 indoor AP
- Includes 30” RPSMA pigtails, does not include mounting bracket (AP-ANT-MNT-3)



AP-ANT-40 (JW017A)

- Indoor RP-SMA 4x4 downtilt omni-directional antenna
- 5.0dBi (5Ghz) / 4.0dBi (2.4Ghz)
- Requires one antenna per 4x4 indoor AP
- Includes 30” RPSMA pigtails, attaches to ceiling tiles (via hole drilled in tile)



AP-ANT-45 (JW018A)

- Indoor RP-SMA 90° x 90° 4x4 directional antenna
- 5.5dBi (5Ghz) / 4.5dBi (2.4Ghz)
- Requires one antenna per 4x4 indoor AP
- Includes 30” RPSMA pigtails, does not include mounting bracket (AP-ANT-MNT-5)



AP-ANT-48 (JW019A)

- Indoor RP-SMA 60° x 60° 4x4 directional antenna
- 8.5dBi (5Ghz) / 8.5dBi (2.4Ghz)
- Requires one antenna per 4x4 indoor AP
- Includes 30” RPSMA pigtails, does not include mounting bracket (AP-ANT-MNT-4)



AP-ANT-MNT-3 (JW020A)

- Mounting Bracket for AP-ANT-25A and ANT-28

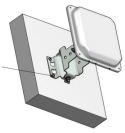

AP-ANT-MNT-4 (JW021A)

- Mounting bracket for AP-ANT-48

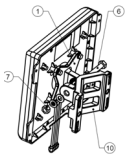

AP-ANT-MNT-5 (JW022A)

- Mounting bracket for AP-ANT-45

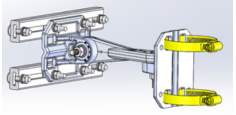

OUTDOOR ANTENNAS

ANT-2x2-2005 (JW023A)



- Outdoor N-male 2x2 2.4Ghz polarized omni-directional antennas (1x H-pol and 1x V-pol)
- 5.0dBi (2.4Ghz)
- Requires one antenna kit per 2x2 2.4Ghz outdoor AP radio
- Attaches directly to the AP, includes mounting clips if needed for installation

ANT-4x4-5005 (JW026A)



- Outdoor N-male 4x4 5Ghz polarized omni-directional antennas (2x H-pol and 2x V-pol)
- 5.0dBi (5Ghz)
- Requires one antenna kit per 4x4 5Ghz outdoor AP radio
- Attaches directly to the AP, includes mounting clips if needed for installation

ANT-4x4-5010 (JW027A)



- Outdoor N-male 4x4 5Ghz polarized omni-directional antennas (2x H-pol and 2x V-pol)
- 10.0dBi (5Ghz)
- Requires one antenna kit per 4x4 5Ghz outdoor AP radio
- Attaches directly to the AP, includes mounting clips if needed for installation

ANT-4x4-D100 (Q8N50A)



- Outdoor N-female 4x4 90° x 90° polarized directional antenna
- 5.0dBi (5Ghz) / 6.0dBi (2.4Ghz)
- Requires one antenna per outdoor AP radio (or two per outdoor AP)
- Includes outdoor mounting bracket, requires qty 4 N-male to N-male antenna cables to connect to outdoor AP (ANT-CBL1, ANT-CBL2, etc.)

ANT-4x4-D608 (Q8N51A)



- Outdoor N-female 4x4 60° x 60° polarized directional antenna
- 7.5dBi (5Ghz) / 7.7dBi (2.4Ghz)
- Requires one antenna per outdoor AP radio (or two per outdoor AP)
- Includes outdoor mounting bracket, requires qty 4 N-male to N-male antenna cables to connect to outdoor AP (ANT-CBL1, ANT-CBL2, etc.)

ANT-2x2-2314 (JW024A)



- Outdoor N-female 2x2 2.4Ghz 30° x 30° polarized directional antenna
- 14dBi (2.4Ghz)
- Requires one antenna per outdoor AP 2.4Ghz radio
- Includes outdoor mounting bracket, requires qty 2 N-male to N-male antenna cables to connect to outdoor AP (ANT-CBL1, ANT-CBL2, etc.)

ANT-4x4-5314 (JX988A)



- Outdoor N-female 4x4 5Ghz 30° x 30° polarized directional antenna
- 14dBi (5Ghz)
- Requires one antenna per outdoor AP 5Ghz radio
- Includes outdoor mounting bracket, requires qty 4 N-male to N-male antenna cables to connect to outdoor AP (ANT-CBL1, ANT-CBL2, etc.)

ANT-2x2-2714 (JW025A)



- Outdoor N-female 2x2 2.4Ghz 70° x 23° polarized directional antenna
- 14dBi (2.4Ghz)
- Requires one antenna per outdoor AP 2.4Ghz radio
- Includes outdoor mounting bracket, requires qty 2 N-male to N-male antenna cables to connect to outdoor AP (ANT-CBL1, ANT-CBL2, etc.)

ANT-3x3-5712 (JW033A)



- Outdoor N-female 3x3 5Ghz 70° x 25° polarized directional antenna
- 11.5dBi (5Ghz)
- Requires one antenna per outdoor AP 5Ghz radio
- Includes outdoor mounting bracket, requires qty 3 N-male to N-male antenna cables to connect to outdoor AP (ANT-CBL1, ANT-CBL2, etc.). If used on a 4x4 AP then the unused 4th connector should be terminated with a 50 Ohm terminator (purchased separately)

ANT-CBL-1 (JW068A)



- Outdoor rated 1m N-male to N-male RF cable
- To connect outdoor directional antennas to outdoor APs

ANT-CBL-2 (JW069A)



- Outdoor rated 2m N-male to N-male RF cable
- To connect outdoor directional antennas to outdoor APs

AFC7DL03-00 (JW064A)



- Outdoor rated 3m N-male to N-male RF cable
- To connect outdoor directional antennas to outdoor APs
- Use of this cable requires installation of AP-LAR-1 (one per cable with AP-LAR-1 attached directly to the outdoor AP)

AFC7DL04-00 (JW065A)



- Outdoor rated 4m N-male to N-male RF cable
- To connect outdoor directional antennas to outdoor APs
- Use of this cable requires installation of AP-LAR-1 (one per cable with AP-LAR-1 attached directly to the outdoor AP)

AP-CBL-1 (JW070A)



- Outdoor rated 3m N-male to N-female RF cable
- To use for extending a cable between outdoor APs and N-male outdoor omni antennas
- Use of this cable requires installation of AP-LAR-1 (one per cable with AP-LAR-1 attached directly to the outdoor AP)

AFC2DL6-00 (JW066A)



- Indoor rated 60cm RPSMA-male to N-female RF jumper cable
- To use when needing to extend an AP's RPSMA connectors to an N-male external antenna or RF cable

AFCSJMTM-00 (JW067A)



- Indoor rated 60cm RPSMA-male to N-male RF jumper cable
- To use when needing to extend an AP's RPSMA connectors to an N-female external antenna or RF cable

AP-LAR-1 (JW061A)



- Lightning arrestor that is attached directly to the outdoor AP's connector
- To be used when antenna cables longer than 2m are used (cables at 2m and under do not require AP-LAR-1)

ACCESS POINT POWER SOLUTIONS

INDOOR POWER ACCESSORIES

AP-POE-AFGE (R6P68A)



- 802.3af indoor Power-over-Ethernet (PoE) injector
- 1Gbps Ethernet interface
- Requires country-specific power cord

AP-POE-ATSR (R6P67A)



- 802.3at indoor Power-over-Ethernet (PoE) injector
- 5Gbps SmartRate Ethernet interface
- Requires country-specific power cord

AP-POE-BTSR (R1C73A)



- 802.3bt indoor Power-over-Ethernet (PoE) injector
- 5Gbps SmartRate Ethernet interface
- Requires country-specific power cord

AP-AC2-12B (R3K00A)



- AC to DC (12V/48W) power supply for indoor APs
- Compatible with AP-303, AP-304/305, AP-314/315, AP-324/325, AP-504/505, AP-503H, and AP-514/515

AP-AC2-48C (R3K01A)



- AC to DC (48V/50W) power supply for indoor APs
- Compatible with AP-303H, AP-303P, AP-334/335, AP-344/345, AP-505H, AP-534/535, and AP-555

Power Cords

Power cord chart for power supplies, power injectors, etc.



OUTDOOR POWER ACCESSORIES

PD-9001GO-NA / PD-9001GO-INTL (JW700A / JW701A)

- 802.3at outdoor AC Power-over-Ethernet (PoE) injector
- 1Gbps Ethernet interface with integrated Ethernet surge protection
- NA includes power cable with North America plug, the INTL includes the power cable with no termination (requires country-specific plug installation)



PD-9001GO-DC (JW630A)

- 802.3at outdoor DC Power-over-Ethernet (PoE) injector
- 1Gbps Ethernet interface with integrated Ethernet surge protection
- Unit includes gland kit to terminate 2x DC wires (assembly required)



PD-Mount-OD (JW620A)

- Outdoor mounting bracket for the PD-9001GO-NA / INTL / DC power injector
- Supports wall or pole mounting



PC-OD-AC-P-NA / PC-OD-AC-P-INT (JW081A / JW080A)

- Outdoor AC power cable for AP-370 Series APs (excluding AP-370EX/ATEX)
- NA cable has North American plug installed, INTL version includes the cable but is not terminated on the plug end (requires country-specific plug installation)



CKIT-OD-AC-P (JW079A)

- The gland kit required to build your own AC power cable
- Includes the gland components to terminate the AP side of the power cable using user-supplied outdoor rated power cable and plug termination (if required)



MISCELLANEOUS ACCESS POINT POWER ACCESSORIES

INDOOR ACCESS POINT ACCESSORIES

AP-303H-CVR-20 (JY973A)



- Aesthetic cover for the AP-303H, can be used to either hide the Aruba logo, or to have the cover painted, colored, or vinyl skinned to match the desired appearance
- Sold in packs of 20

AP-303-CVR-20 (JZ327A)

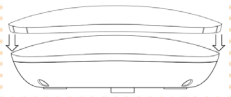

- Aesthetic cover for the AP-303 and AP-303P, can be used to either hide the Aruba logo, or to have the cover painted, colored, or vinyl skinned to match the desired appearance
- Sold in packs of 20

AP-305-CVR-20 (JX951A)

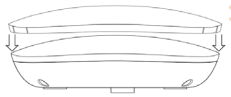

- Aesthetic cover for the AP-305, can be used to either hide the Aruba logo, or to have the cover painted, colored, or vinyl skinned to match the desired appearance
- Not compatible with the AP-304 (unless end-user manually drills out holes for connectors, non-returnable if modified)
- Sold in packs of 20

AP-315-CVR-20 (JW827A)

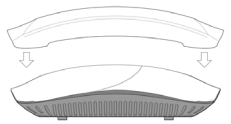

- Aesthetic cover for the AP-315, can be used to either hide the Aruba logo, or to have the cover painted, colored, or vinyl skinned to match the desired appearance
- Not compatible with the AP-314 (unless end-user manually drills out holes for connectors, non-returnable if modified)
- Sold in packs of 20

AP-325-CVR-20 (JW076A)

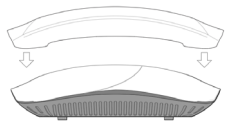

- Aesthetic cover for the AP-325, can be used to either hide the Aruba logo, or to have the cover painted, colored, or vinyl skinned to match the desired appearance
- Not compatible with the AP-324 (unless end-user manually drills out holes for connectors, non-returnable if modified)
- Sold in packs of 20

AP-335-CVR-20 (JW828A)

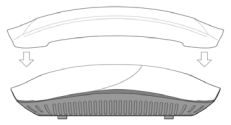

- Aesthetic cover for the AP-335 or AP-345, can be used to either hide the Aruba logo, or to have the cover painted, colored, or vinyl skinned to match the desired appearance
- Not compatible with the AP-334 or AP-344 (unless end-user manually drills out holes for connectors, non-returnable if modified)
- Sold in packs of 20

AP-505-CVR-20 (R2H24A)



- Aesthetic cover for the AP-505, can be used to either hide the Aruba logo, or to have the cover painted, colored, or vinyl skinned to match the desired appearance
- Not compatible with the AP-504 (unless end-user manually drills out holes for connectors, non-returnable if modified)
- Sold in packs of 20

AP-515-CVR-20 (Q9H74A)

- Aesthetic cover for the AP-515, can be used to either hide the Aruba logo, or to have the cover painted, colored, or vinyl skinned to match the desired appearance
- Not compatible with the AP-514 (unless end-user manually drills out holes for connectors, non-returnable if modified)
- Sold in packs of 20

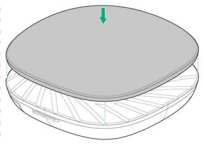

AP-535-CVR-20 (JZ368A)

- Aesthetic cover for the AP-535, can be used to either hide the Aruba logo, or to have the cover painted, colored, or vinyl skinned to match the desired appearance
- Not compatible with the AP-534 (unless end-user manually drills out holes for connectors, non-returnable if modified)
- Sold in packs of 20

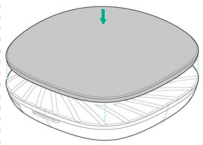

AP-555-CVR-20 (JZ369A)

- Aesthetic cover for the AP-555, can be used to either hide the Aruba logo, or to have the cover painted, colored, or vinyl skinned to match the desired appearance
- Sold in packs of 20

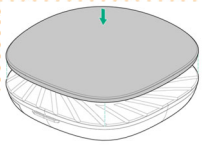

AP-CBL-SER (JW071A)

- Serial console adapter cable using a 4-pin connector to a DB9 serial interface
- Compatible with AP-304/305, and AP-314/315



AP-CBL-SERU (JY728A)

- Serial console adapter cable using a proprietary micro-USB plug that contains the serial emulator within the cable
- Compatible with AP-203R/RP, 203H, AP-303/303P, AP-303H, AP-344/345, AP-500H, AP-504/505, AP-514/515, AP-534/535, and AP-555



AP-MOD-SERU (R6Q99A)

- Module that provides an RJ45 serial port from the proprietary micro-USB serial port that is supported on the APs that require the AP-CBL-SERU
- Compatible with AP-203R/RP, 203H, AP-303/303P, AP-303H, AP-344/345, AP-500H, AP-504/505, AP-514/515, AP-534/535, and AP-555

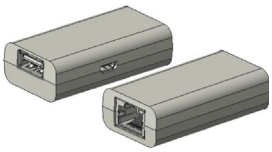

AP-USB-ZB / AP-USB-ZB 10pk / AP-USB-ZB 50pk (R2X45A / R2Y09A / R2Y10A)

- IoT Expansion Radio to support Zigbee, mostly for Aruba APs that lack an integrated Zigbee/802.15.4 radio.
- Intended for AP-303H, AP-304/305, AP-314/315, AP-324/325, AP-334/335, and AP-344/345 (supported on Aruba APs only)



LS-BT1USB-5 / LS-BT1USB-50 (JW315A / JW316A)

- USB BLE Radio for Aruba APs that lack an integrated BLE radio
- Intended for AP-203H



OUTDOOR ACCESS POINT ACCESSORIES

SFP-LX (Q8N52A)

- Temperature-rated LX SFP module for AP-370/318 Series outdoor APs for long-range single-mode fiber applications



SFP-SX (Q8N53A)

- Temperature-rated LX SFP module for AP-370/318 Series outdoor APs for short-range multi-mode fiber applications



Outdoor SFP Weathertight Strain Relief Kit (Q8N54A)

- Strain relief gland kit for AP-370/318 Series APs when fiber is used (required, not included with the AP)
- Not compatible when the AP-270-MNT-V2 is used
- Not to be used with the AP-370EX/ATEX HazLoc APs

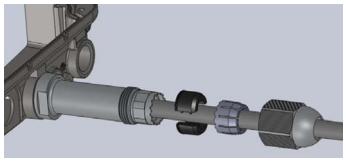

Outdoor HazLoc Fiber Strain Relief Kit (R7L09A)

- Strain relief gland kit for AP-370EX/ATEX Series APs when fiber is used (required, not included with the AP)
- Not compatible when the AP-270-MNT-V2 is used
- Not to be used with the AP-370/318 Series APs

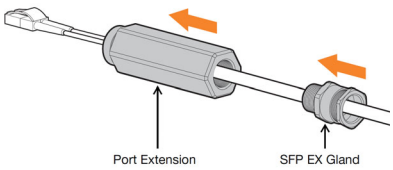

Outdoor Glands and Covers (Q8N47A)

- Is a ‘spares’ package that contains:
  - (5) M20 Ethernet Glands
  - (5) M20 gland port covers
  - (2) M16 USB port covers
  - (2) Spare ground lugs
  - (1) M25 gland port cover



Outdoor M20-to-1/2” NPT Thread Adapter (non-EX Only) (Q8N48A)

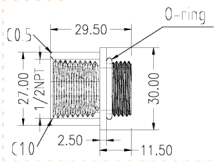

- An M20 to ½” NPT thread adapter to be used when flexible conduit is used to protect the Ethernet cable and terminate the conduit on the AP
- Not to be used with the AP-370EX/ATEX, AP-560EX, or AP-570EX Series APs, as these adapters are not HazLoc rated

AINS2KKIT-00 (JW063A)



- An outdoor antenna installation kit containing zip ties, 2 rolls of 3M electrical tape, and 3 packs of 3M mastic.
- Generally not required for AP-274/374/574, but if/when antenna connectors are used outside of the AP, this kit may be needed.

a Hewlett Packard Enterprise company

www.arubanetworks.com

3333 Scott Blvd. Santa Clara, CA 95054
1.844.472.2782 | T: 1.408.227.4500 | FAX: 1.408.227.4550 | info@arubanetworks.com